Journees du GDR Robotique

Investigations of a wood machining center with parallel kinematic and integrated workpiece handling

Dipl.-Ing. Arne Gerdes

November 09-10, 2010 | PARIS, FRANCE

INSTITUTE OF MACHINE TOOLS AND PRODUCTION TECHNOLOGY (IWF)
TECHNICAL UNIVERSITY OF BRAUNSCHWEIG
LANGER KAMP 19 B
38106 BRAUNSCHWEIG, GERMANY

Deutsche Forschungsgemeinschaft DFG

OUTLINE

1. Aims and functions
2. Kinematic concept
3. Machine topology
4. Recent results

PROBLEMS

HEXAPOD »FELIX« (TU DRESDEN)

- No systematic methodology for development of wood machining centers with parallel kinematics
- Only solutions for reduction of primary processing times
- Integration of functions for the reduction of secondary processing times (handling, dust removal) has not been treated yet

TRIPOD »TRICEPT« (IMA)

TRIGLIDE »PEGASUS« (REICHENBACHER)

BIGLIDE »LAMBDA« (HOMAG, UNIVERSITY OF STUTTGART)

AIMS

- Reduction of primary processing times due to good dynamic behaviour
- Reduction of secondary processing times by integrating different functions

BENEFITS

- Complete processing of workpieces (milling, sawing and drilling)
- High flexibility in production processes with a batch size of one ("Nesting")

REQUIREMENTS

- Maximum dimensions of the workpiece: 3,2 m $\times$ 1,1 m
- Maximum weight of the workpiece: 100 kg
- Degrees of freedom: x, y, z, φ
- Maximum speed in x-direction: 160 m/min
- Maximum acceleration: 1 g

A. Gerdes

- Hybrid concept with parallelkinematic basic structure and two serial axes for workpiece machining and handling
- Basic structure with PRRRP-chain (two prismatic and three rotational joints)
- Symmetric configuration

KINEMATIC CONCEPT

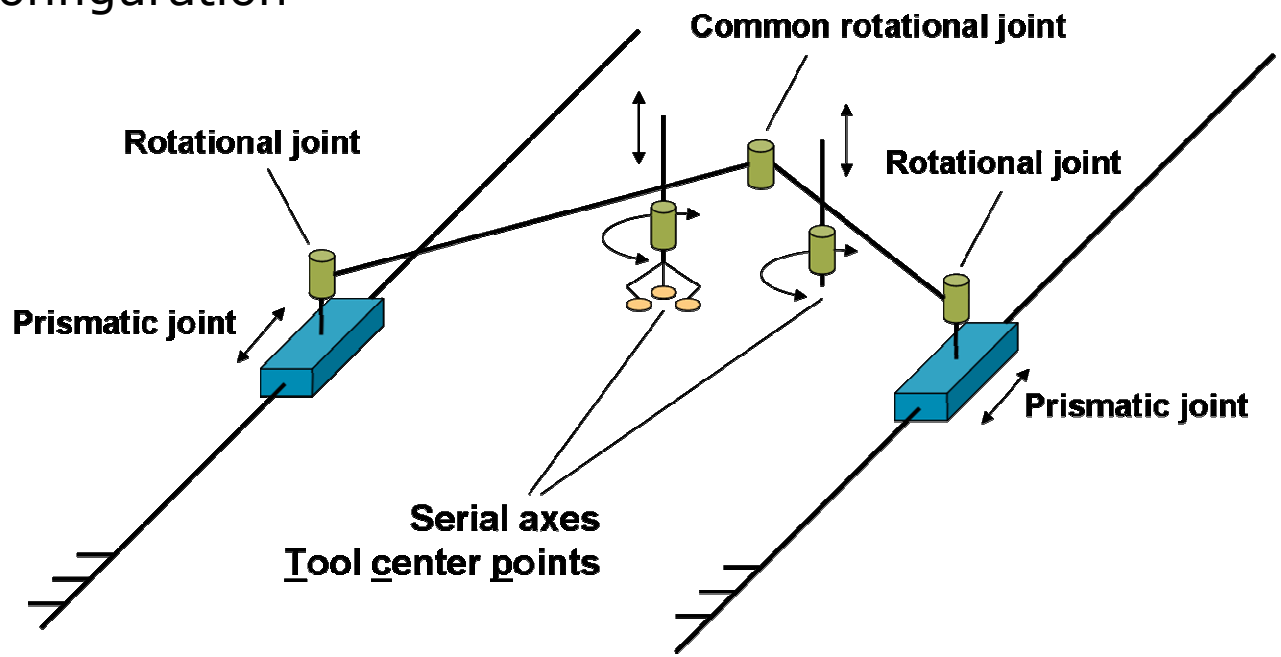

- Two working configurations because of the linkage´s ability to snap through and thus an extension of the working area

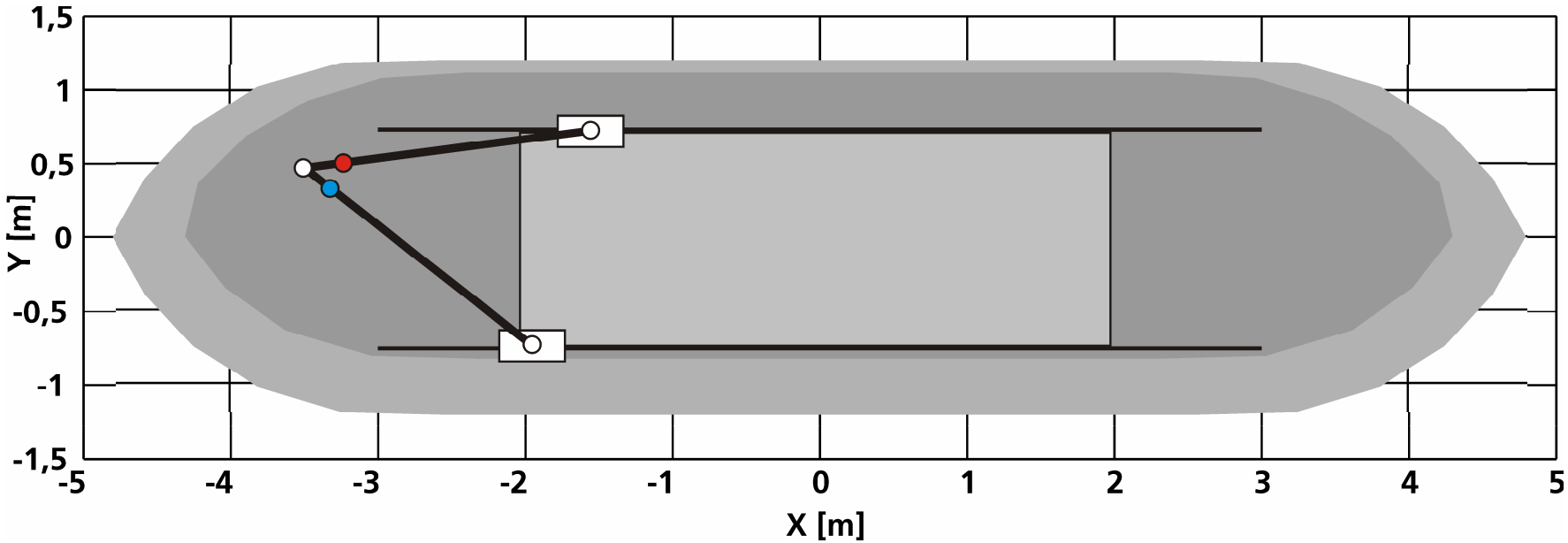

WORKING AREA OF THE PARALLELKINEMATIC BASIC STRUCTURE

"DYNAMIC SNAP-THROUGH" WITH THE HELP OF MASS INERTIA

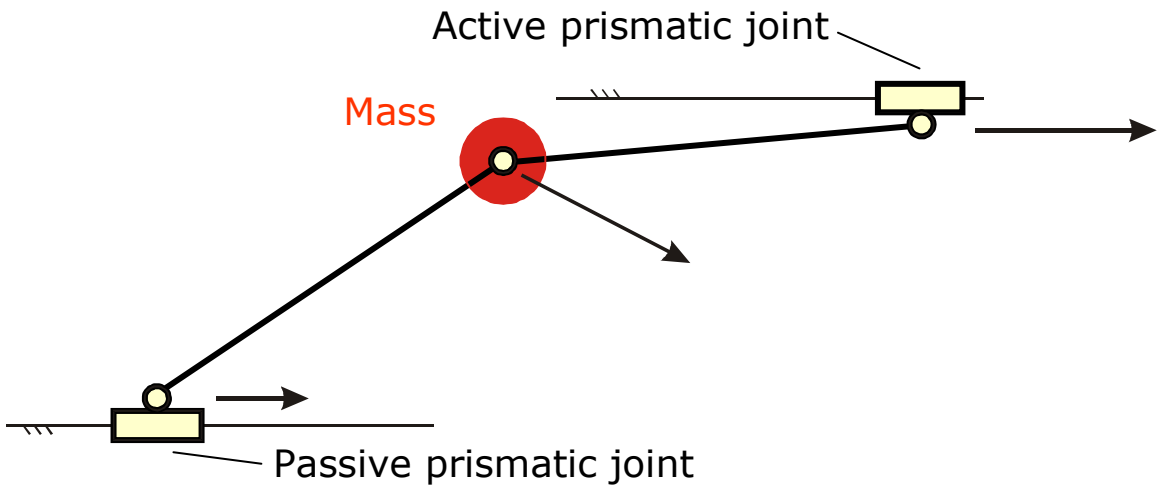

- One driving unit (prismatic joint) is disabled (passive)
- Acceleration of the tool center points towards the singularity by the use of the second driving unit

"DYNAMIC SNAP-THROUGH" WITH THE HELP OF MASS INERTIA

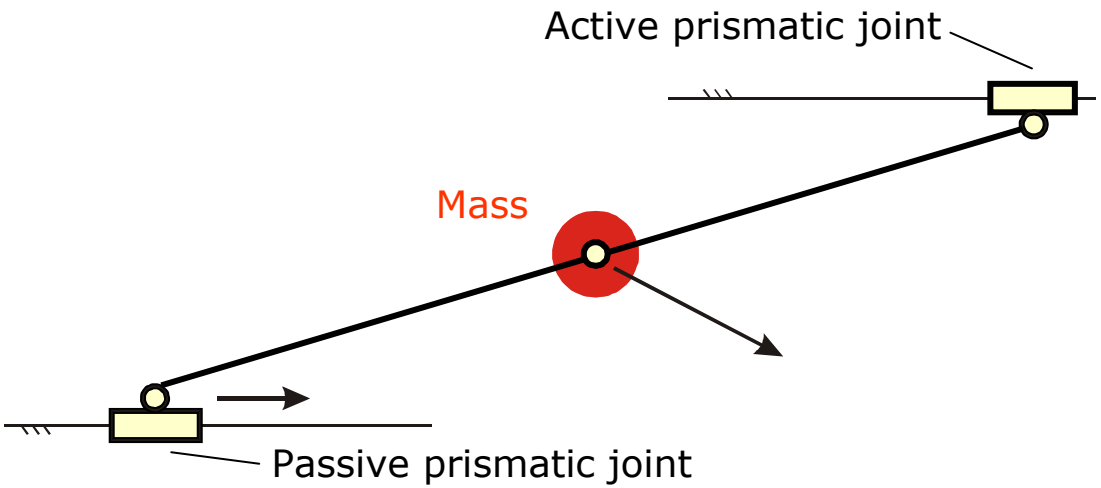

- One driving unit (prismatic joint) is disabled (passive)
- Acceleration of the tool center points towards the singularity by the use of the second driving unit
- Deceleration of the enabled drive when reaching the singularity

"DYNAMIC SNAP-THROUGH" WITH THE HELP OF MASS INERTIA

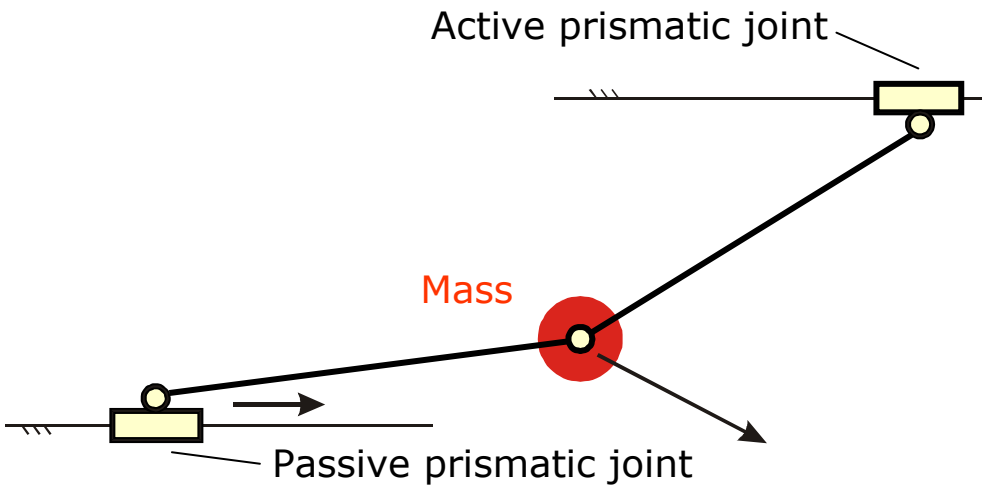

DEPENDENT ON

- Speed of the active driving unit
- Moved masses
- Friction and resisting forces within the joints

- One driving unit (prismatic joint) is disabled (passive)
- Acceleration of the tool center points towards the singularity by the use of the second driving unit
- Deceleration of the enabled drive when reaching the singularity
- Mass inertia ensures the change of the configuration

A. Gerdes

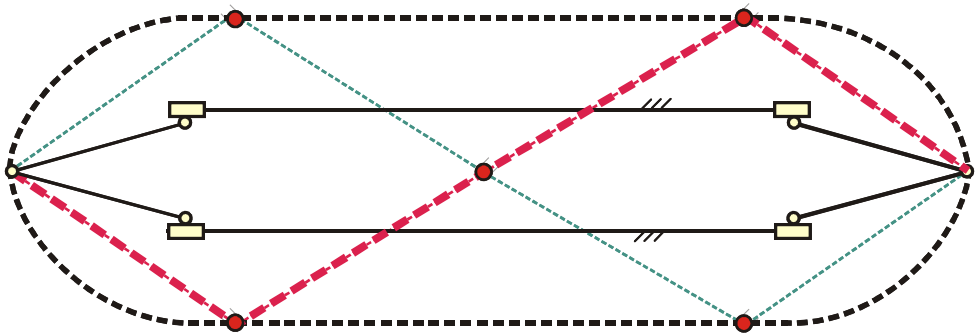

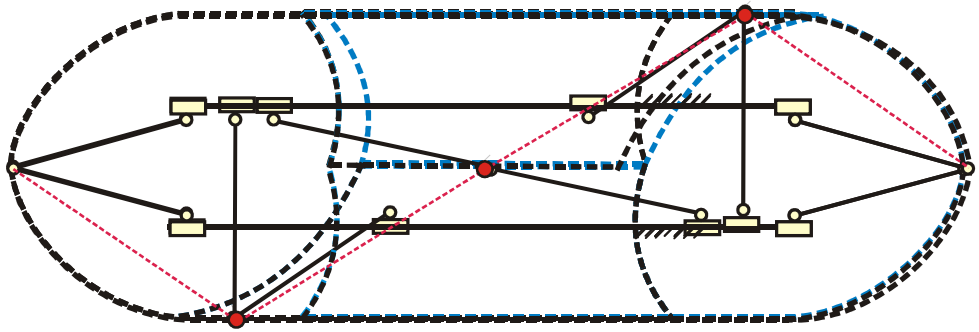

TWO WAYS TO PASS THROUGH THE SINGULARITIES

- Left working area
- 1st type singularity
- 2nd type singularity
- 1st type singularity
- Right working area

Oscillating processing of the workpieces

Flowing processing of the workpieces

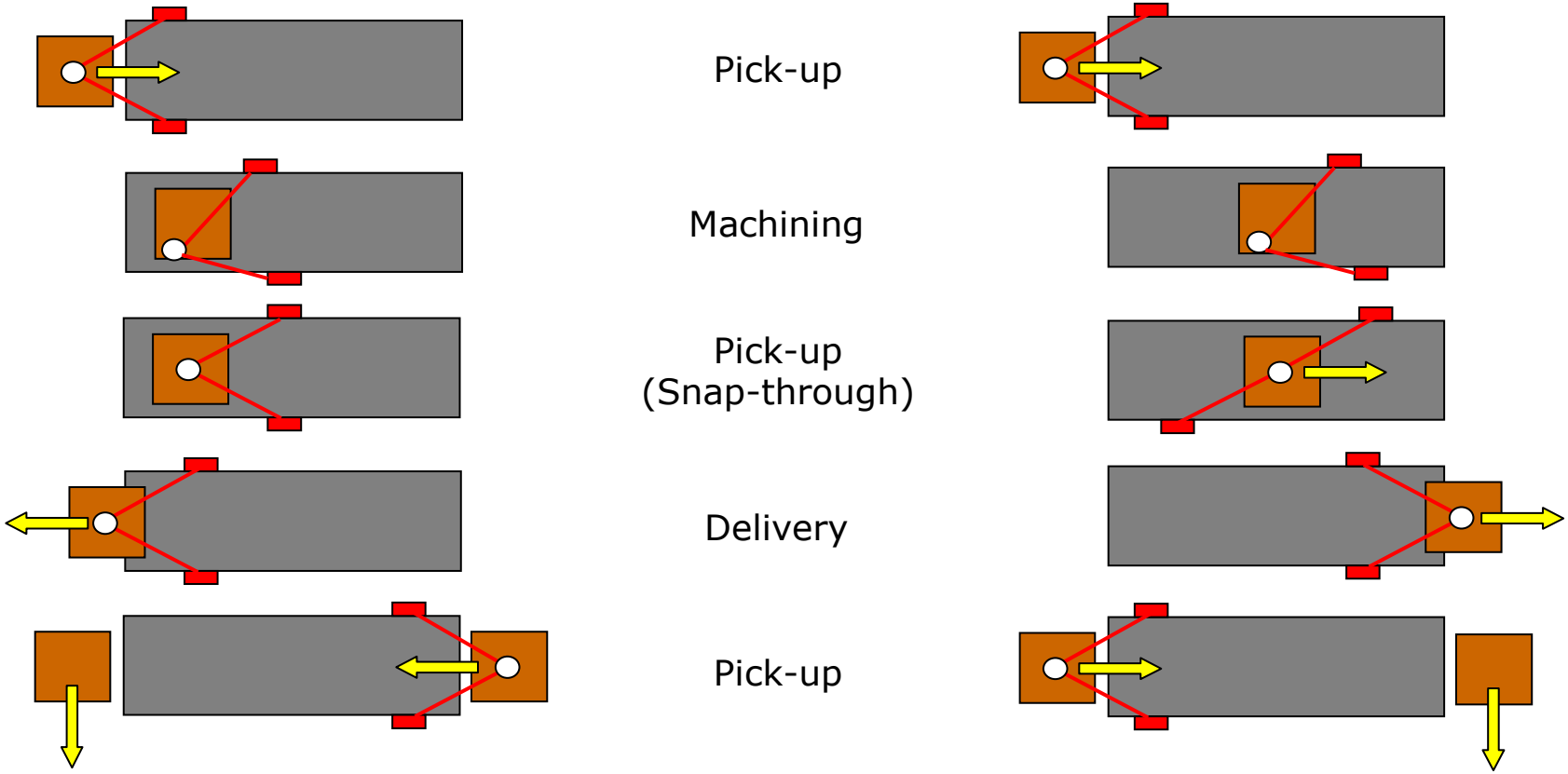

AUTOMATIC TOOL CHANGE

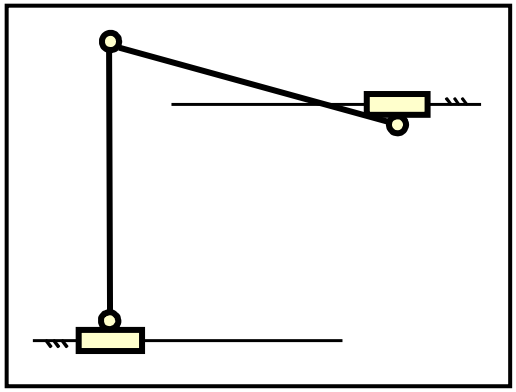

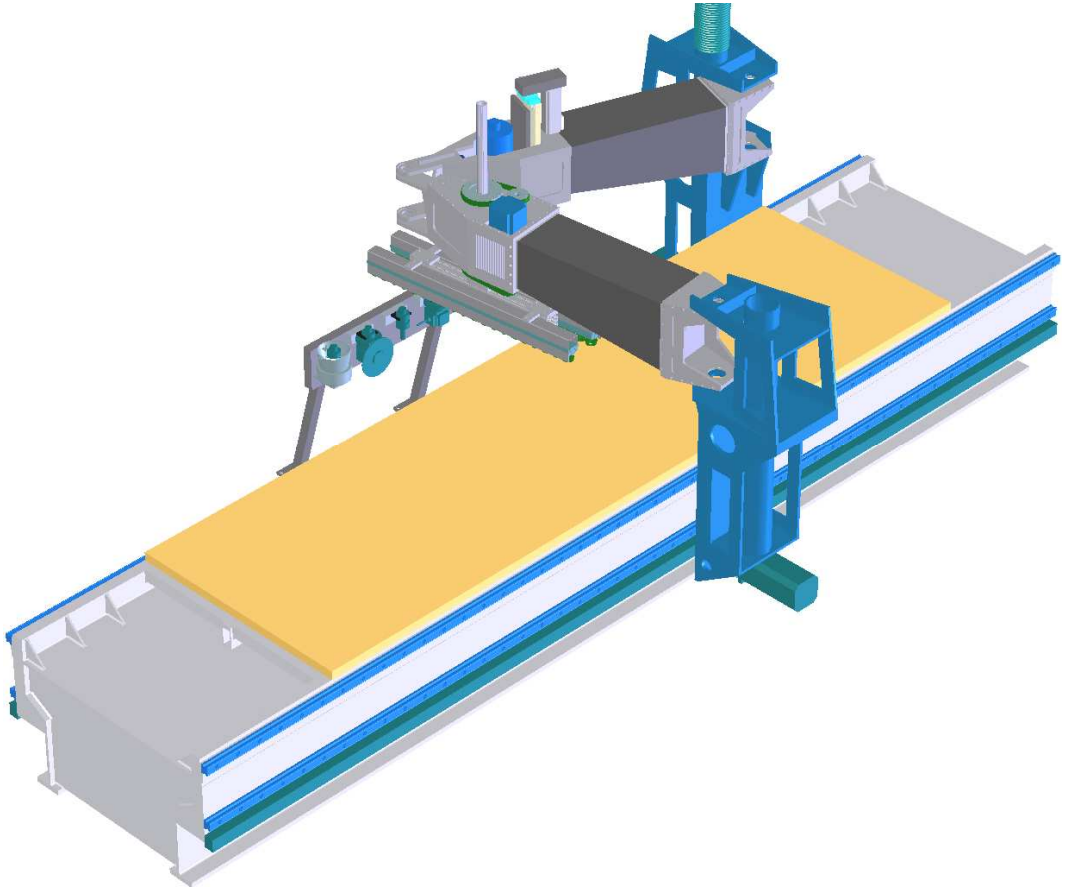

BASIC IDEA: INTEGRATION OF WORKPIECE MACHINING AND HANDLING

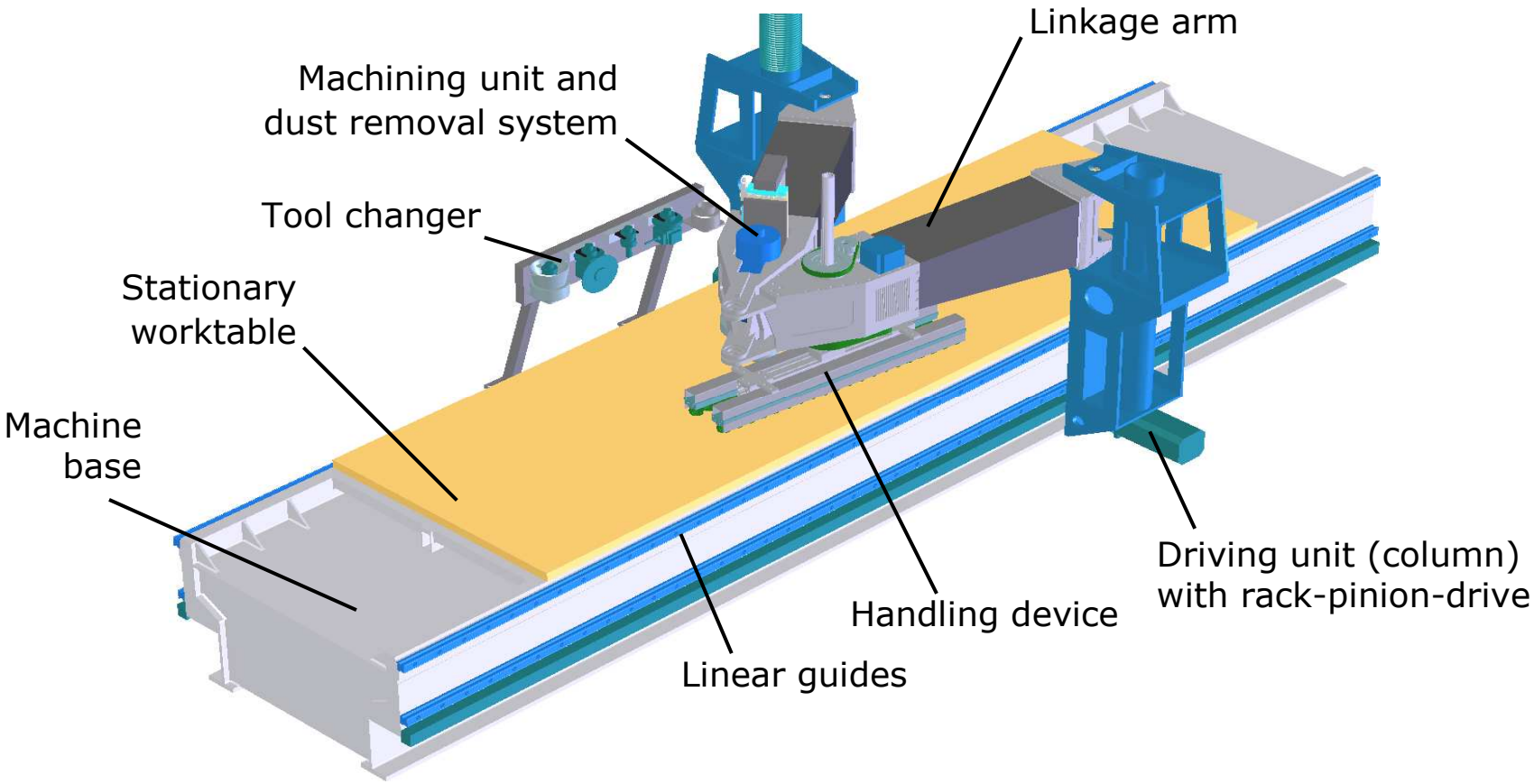

LINKAGE ARM WITH MACHINING UNIT (I)

A. Gerdes

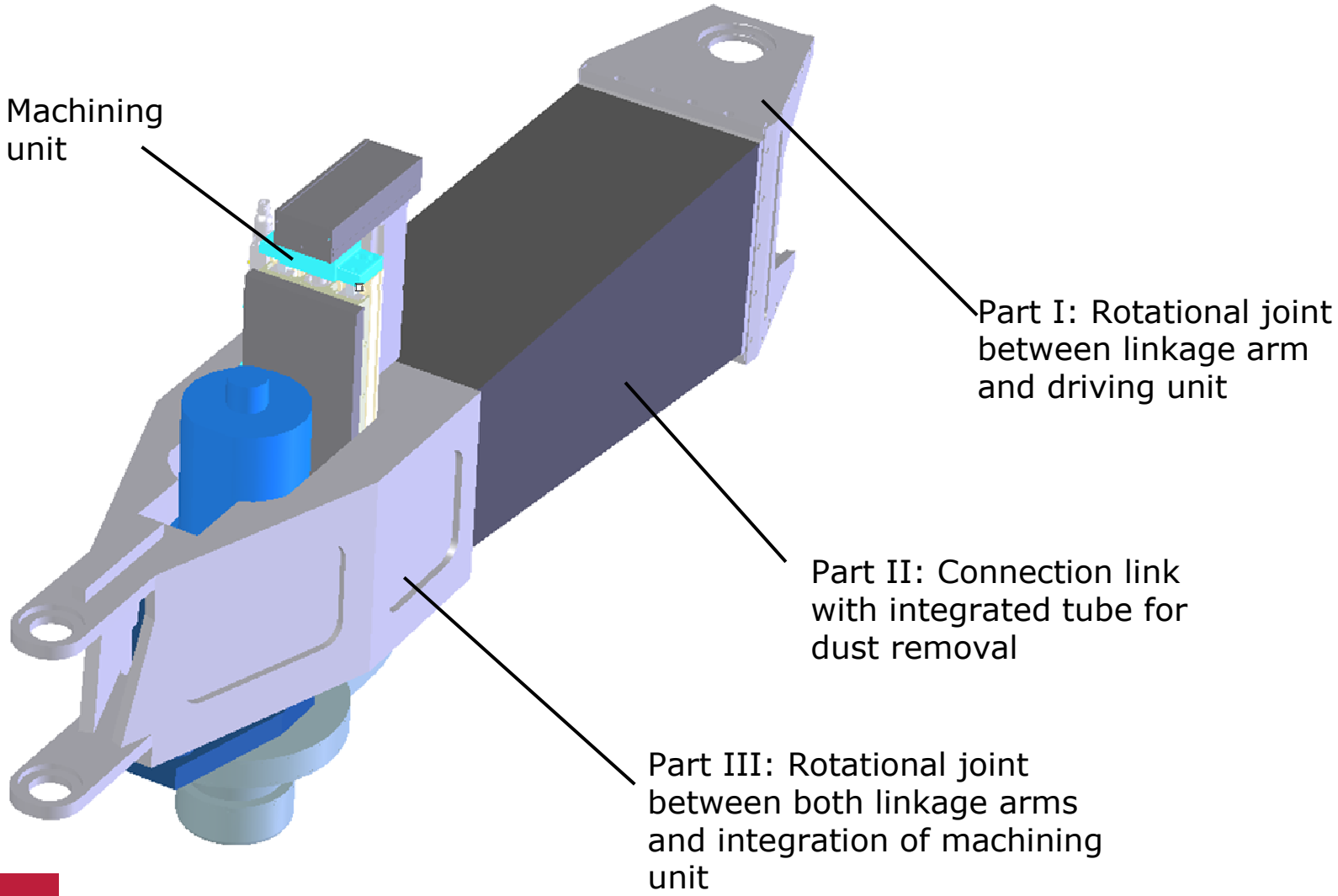

LINKAGE ARM WITH MACHINING UNIT (II)

A. Gerdes

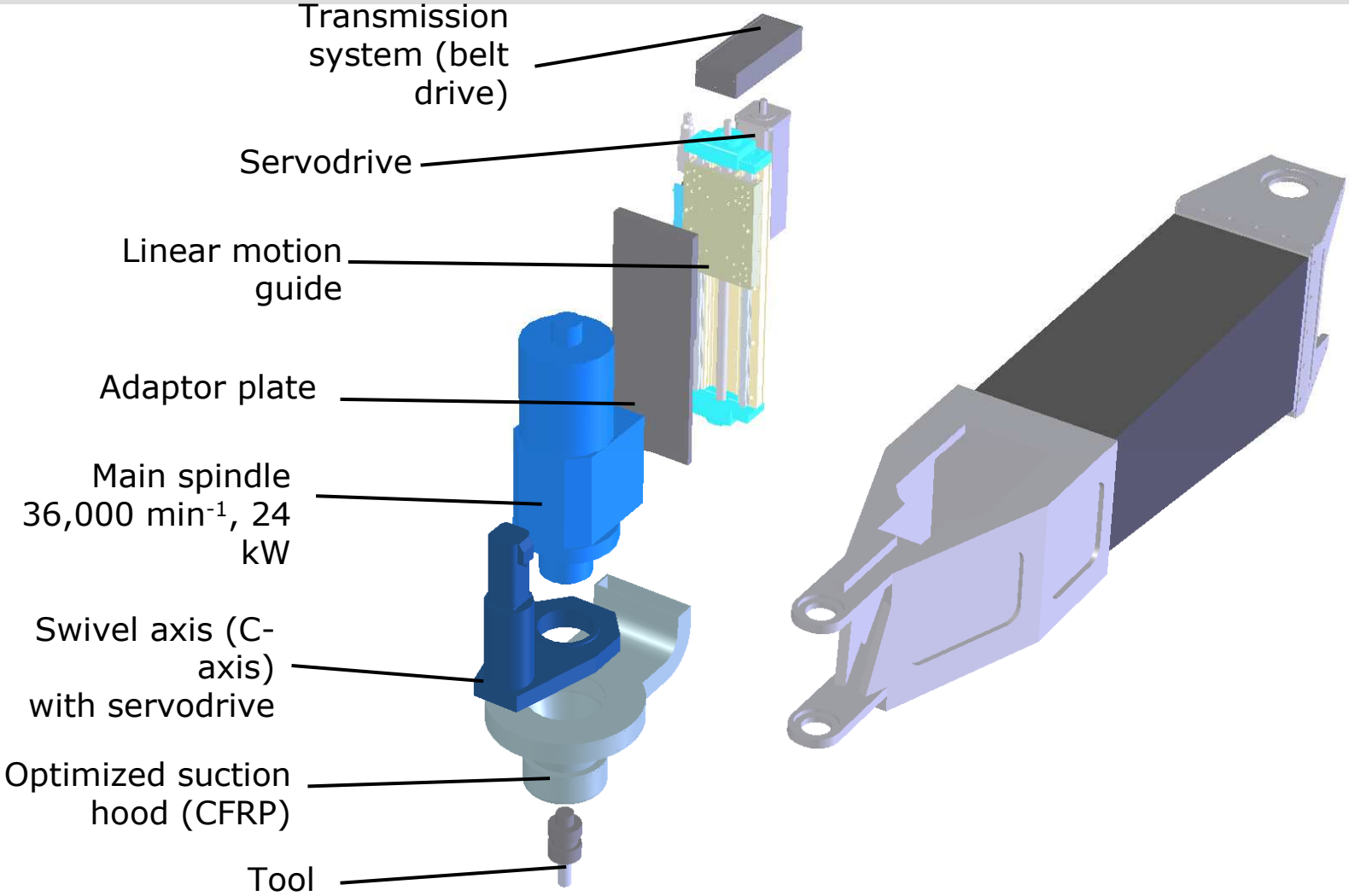

AIM: FLUIDIC ADVANTAGEOUS SUCTION CHANNEL

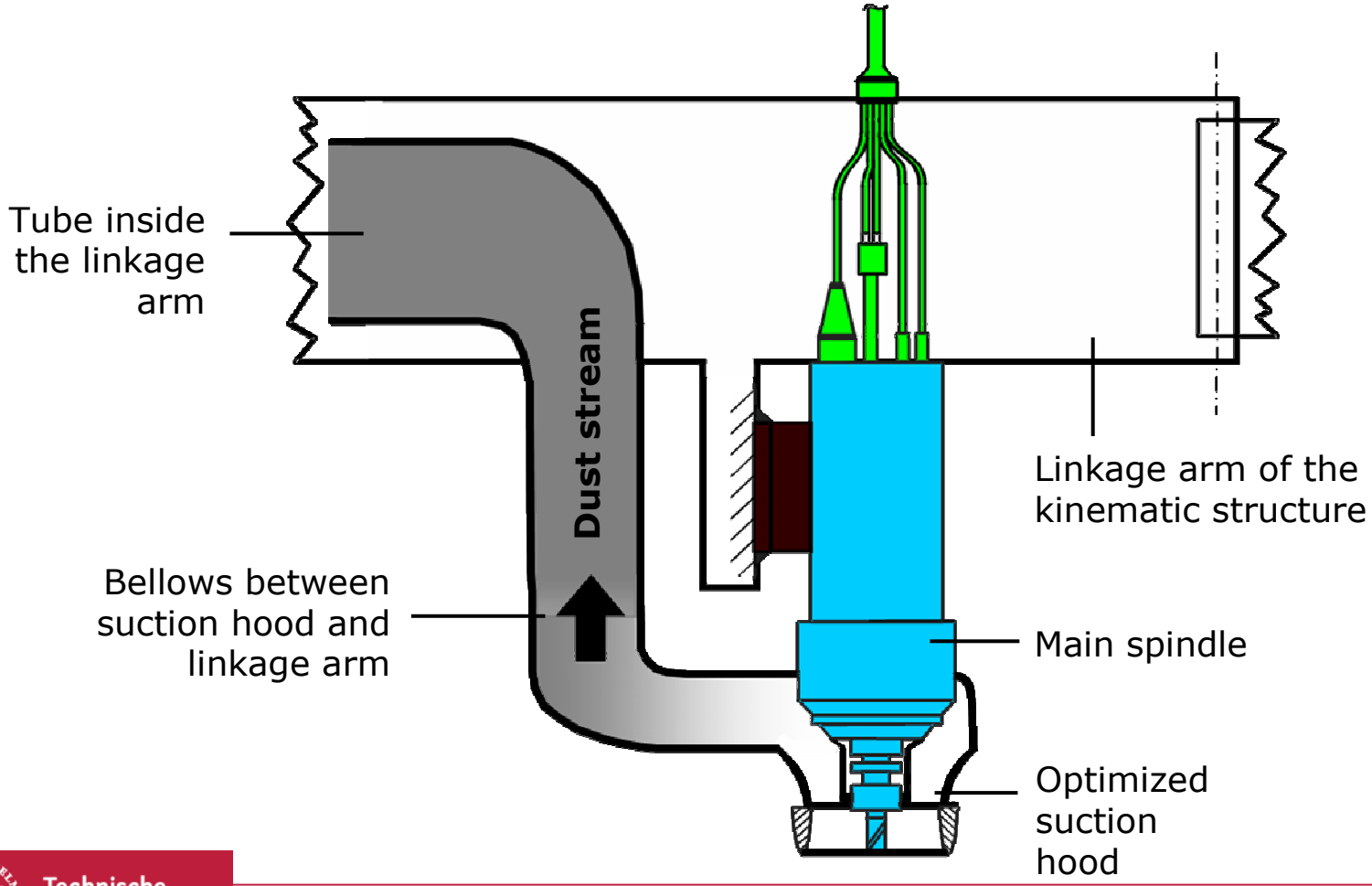

AIM: FLUIDIC ADVANTAGEOUS SUCTION CHANNEL

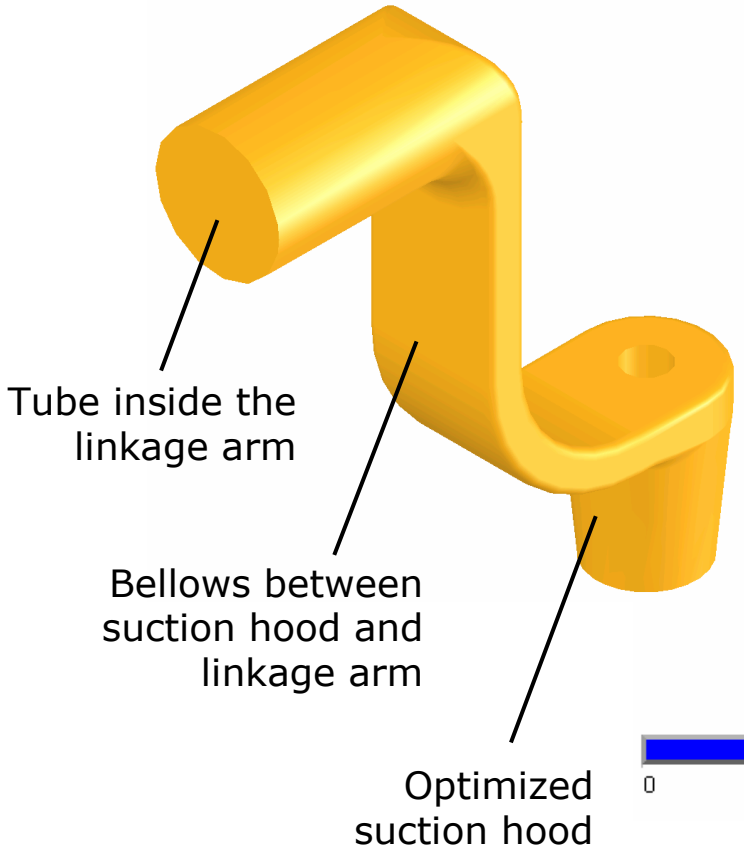

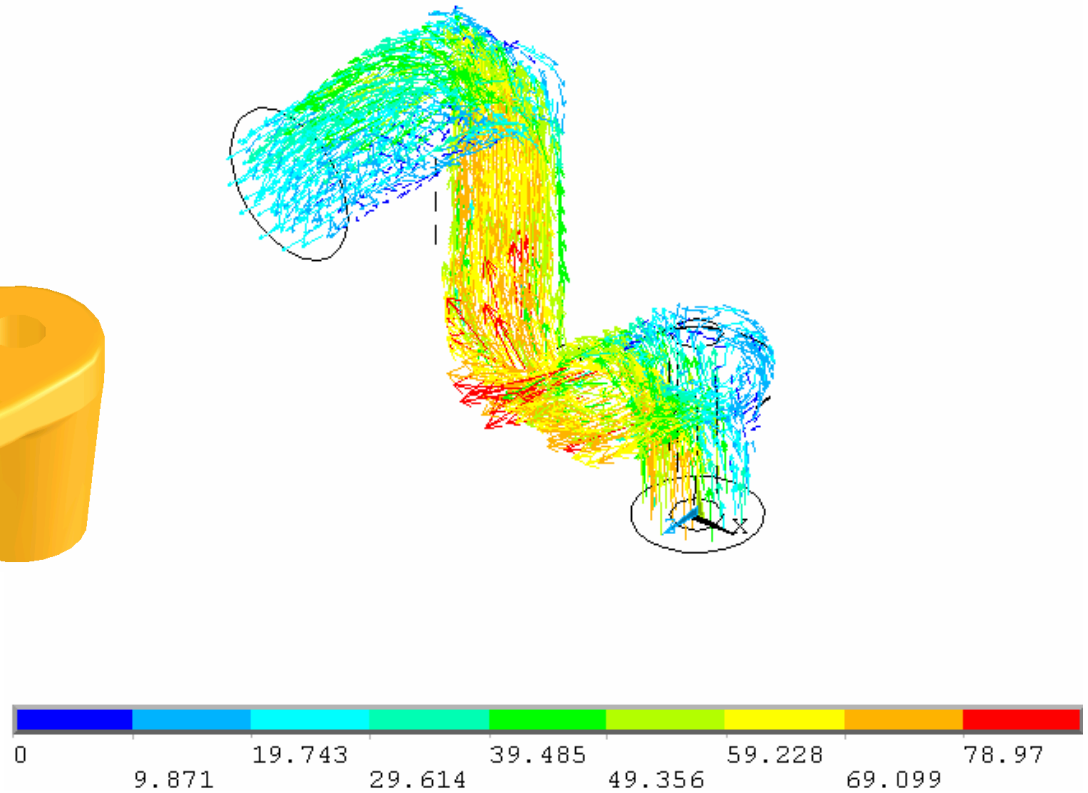

Exit speed (flow rate inside the tube): 20 m/s

LINKAGE ARM WITH HANDLING UNIT (I)

A. Gerdes

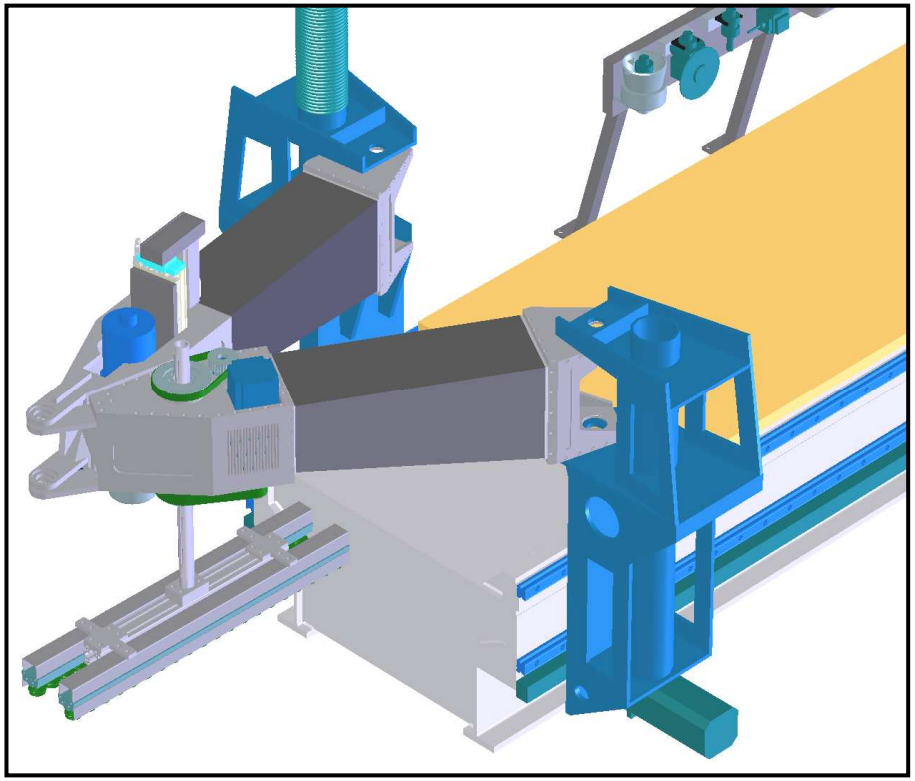

Pick-up of the workpieces and transport onto the worktable from outside the machine

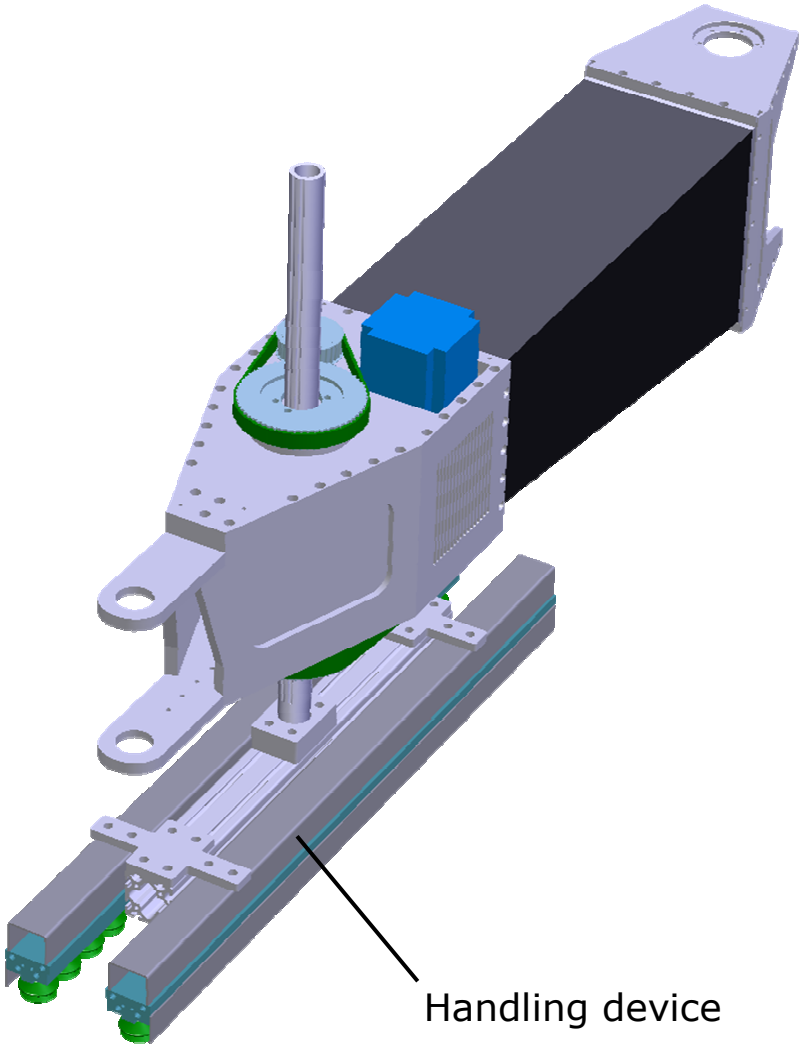

LINKAGE ARM WITH HANDLING UNIT (II)

A. Gerdes

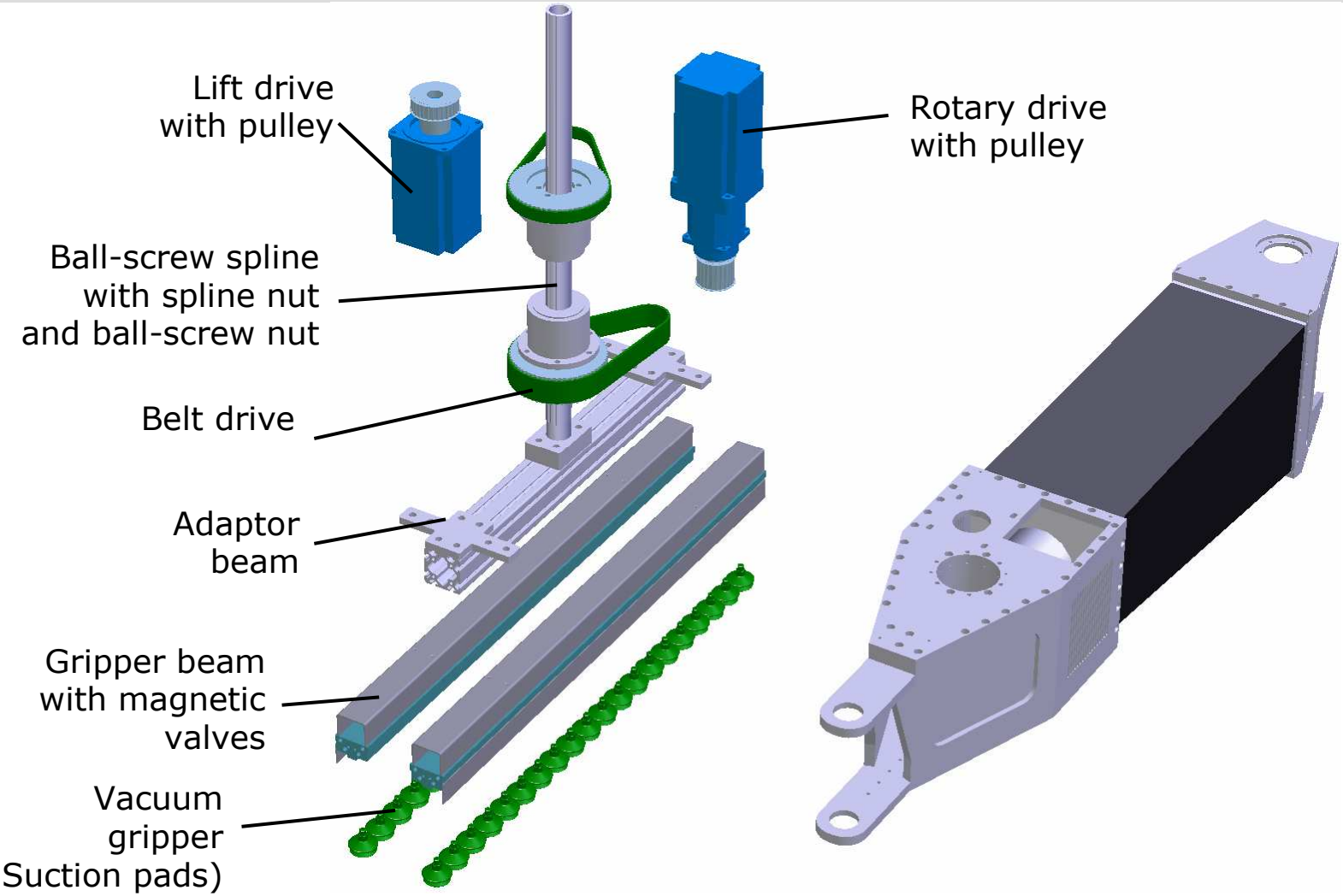

USE OF A RACK-PINION-SYSTEM

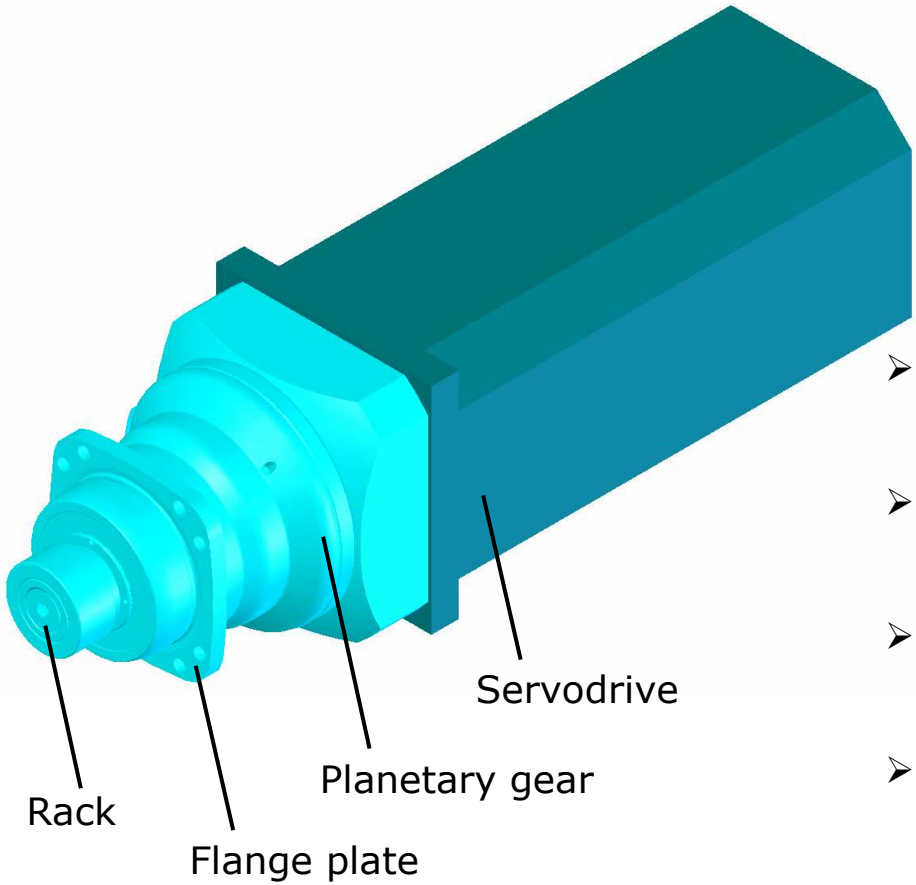

- Use of a precise planetary gear free from backlash in combination with a servodrive
- Low costs in comparison with alternative driving systems (for example direct drive)
- Long feeding path with constant stiffness possible
- Low requirements in terms of the surrounding construction regarding stiffness, sensors or cooling systems of the driving unit

RECENT RESULTS - ASSEMBLING

A. Gerdes

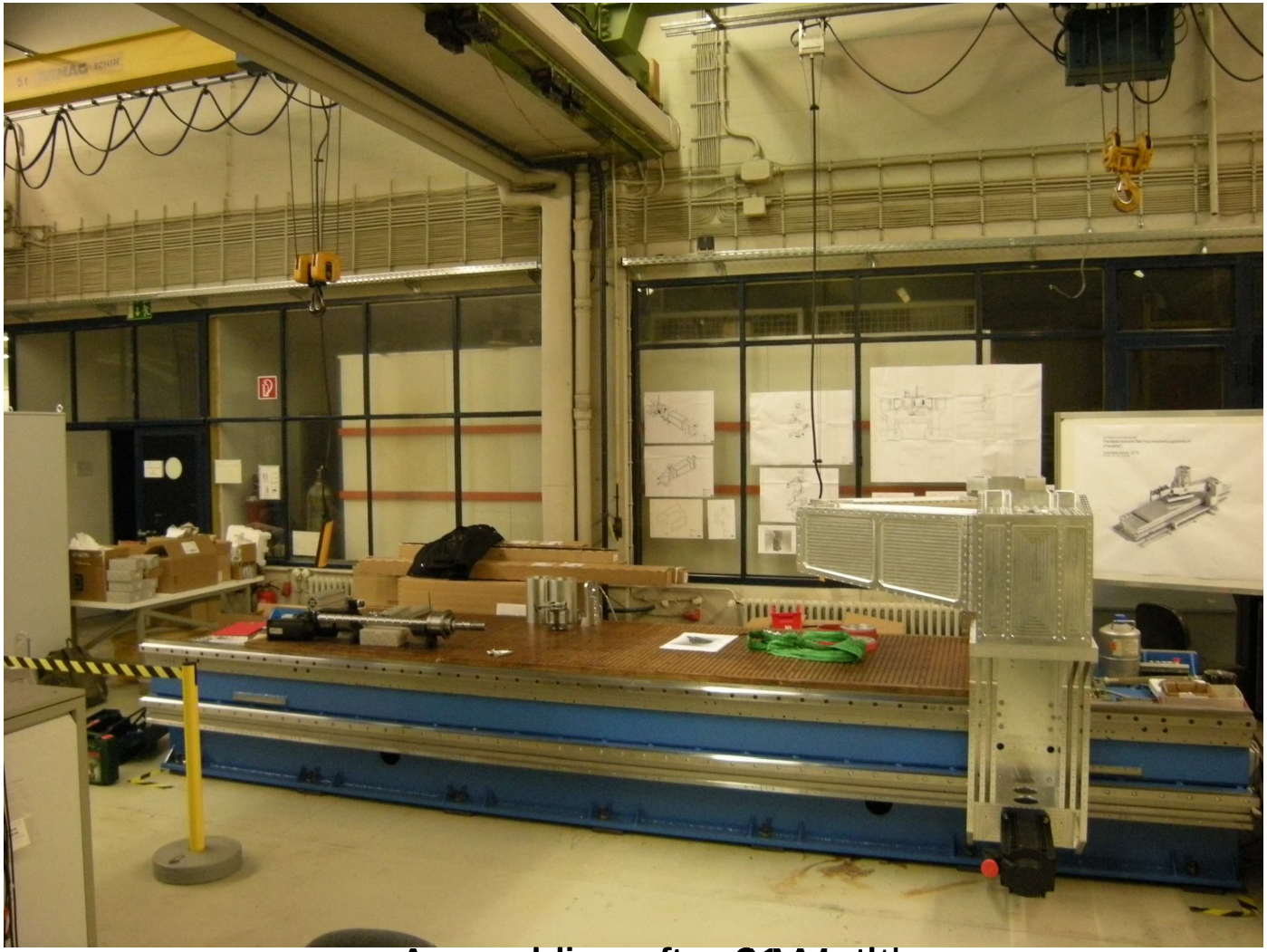

Assembling after 21 Months

VIDEO OF A MOTION SEQUENCE (CHANGE OF CONFIGURATION)

A. Gerdes

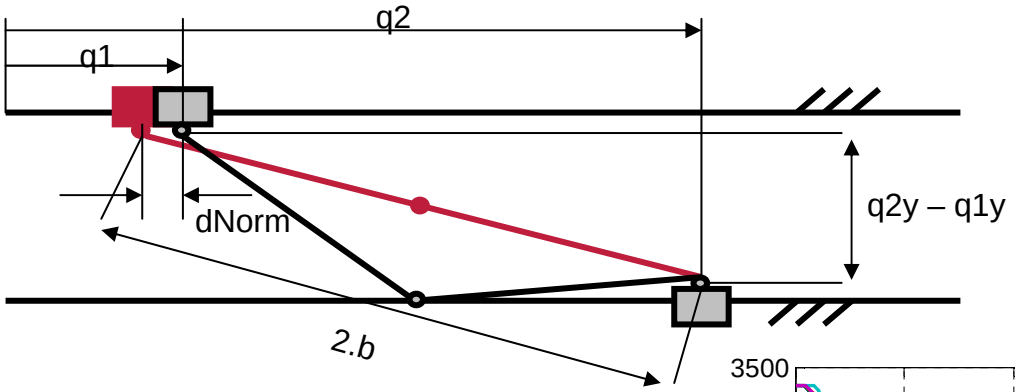
q2
q1
dNorm
q2y – q1y
2.b

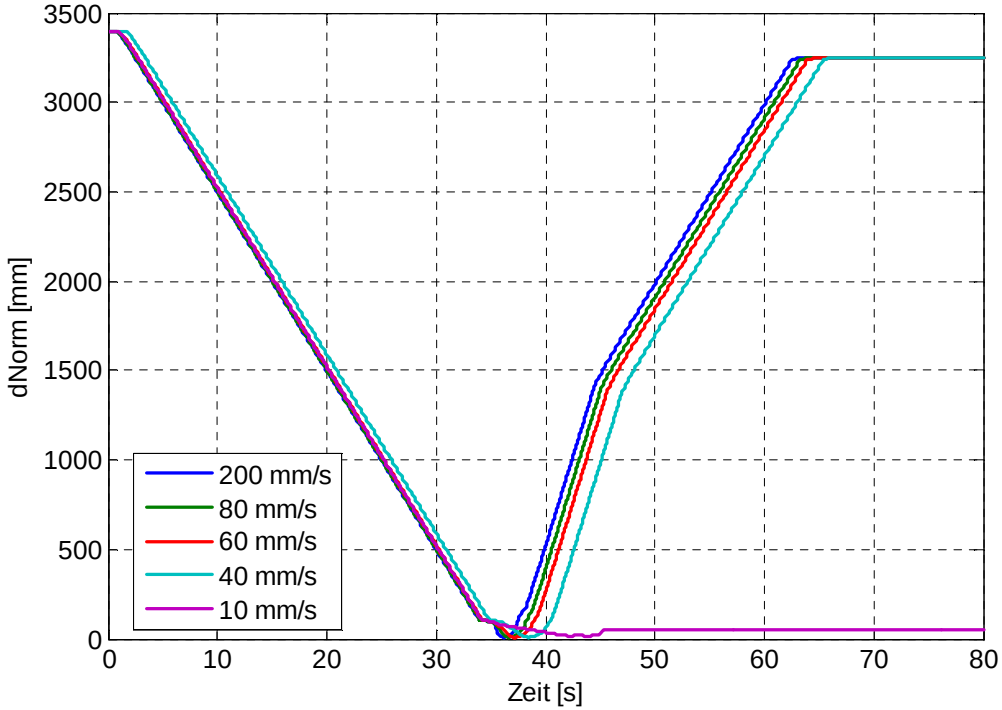
dNorm [mm]
Zeit [s]
200 mm/s
80 mm/s
60 mm/s
40 mm/s
10 mm/s

INVESTIGATIONS IN DIFFERENT CONTROL TYPES

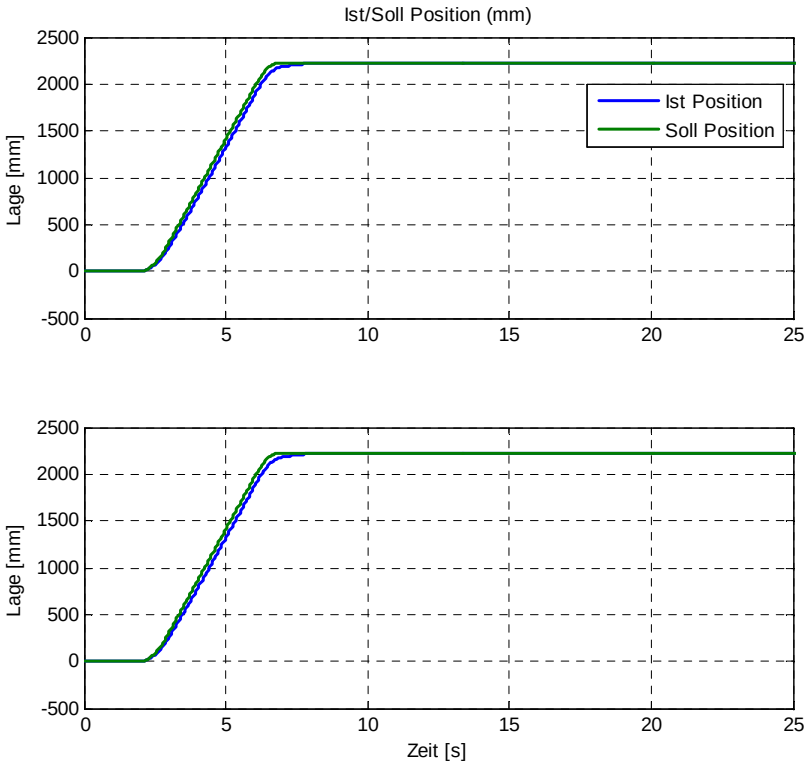

P-Controller feed forward

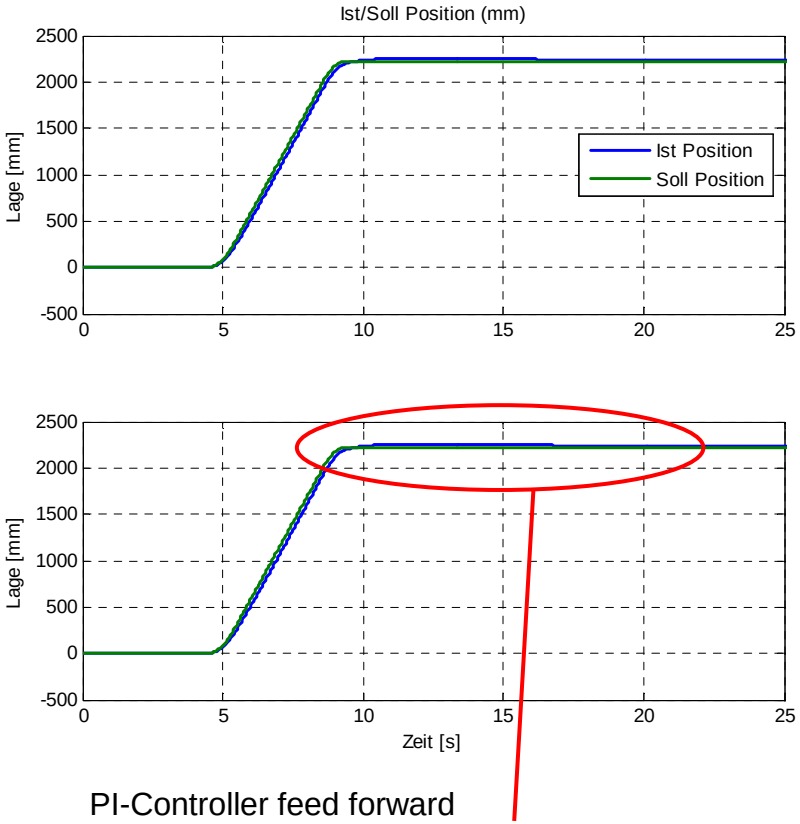

PI-Controller feed forward

Disadvantedge: longer settling time, overshooting 1.5% acceptable

Feed: 30m/min

FIRST RESULTS OF MODAL ANALYSIS (II)

A. Gerdes

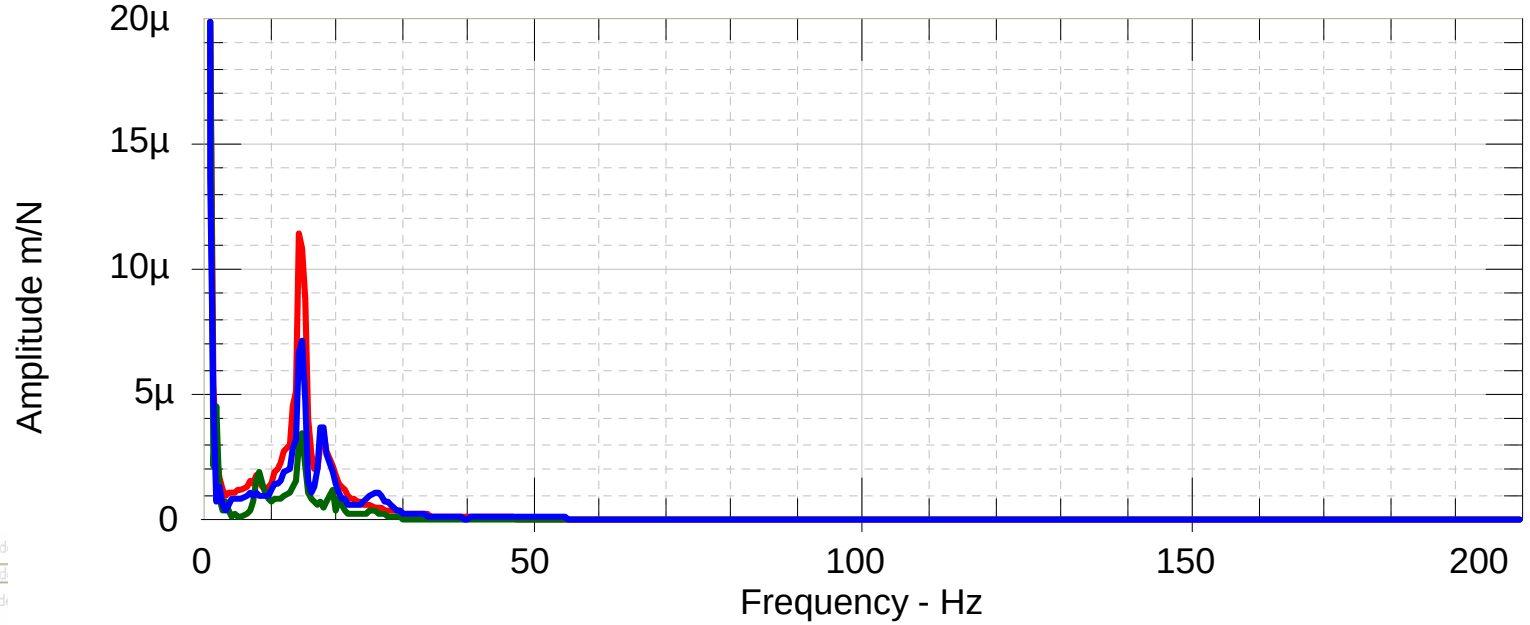

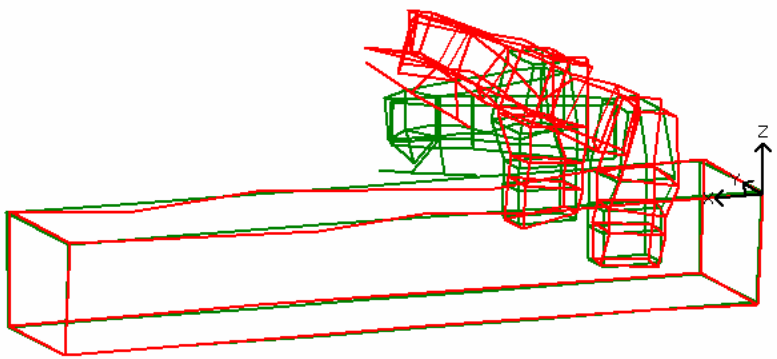

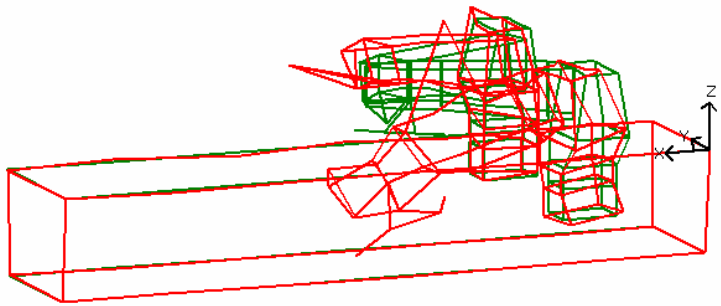

SNAPSHOT CONTROL USER INTERFACE

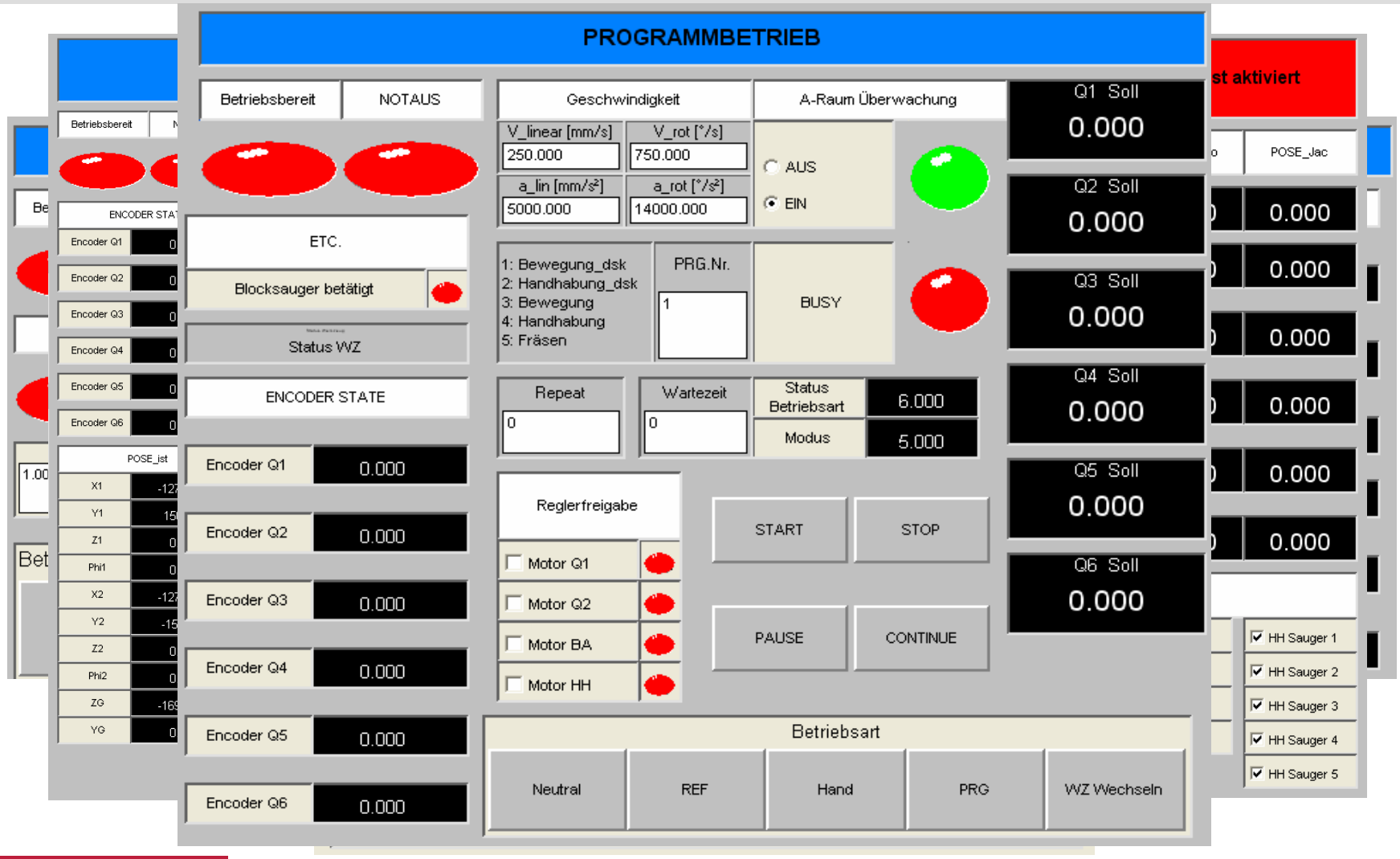

CONCLUSIONS

- Machine concept for a wood machining center with a parallelkinematic basic structure and two serial axes for workpiece machining and handling was assemblied
- Extension of the working area because of two different working configurations
- Change of configurations (Snap through) realised
- Integrated workpiece handling with the help of a vacuum gripper realised
- Control based on MATLAB/Simulink realised
- Modal analysis sets an example for further research activities

Thank you for your attention!